DUBAI. UAE.
nayyar@ducast.com
www.ducast.com

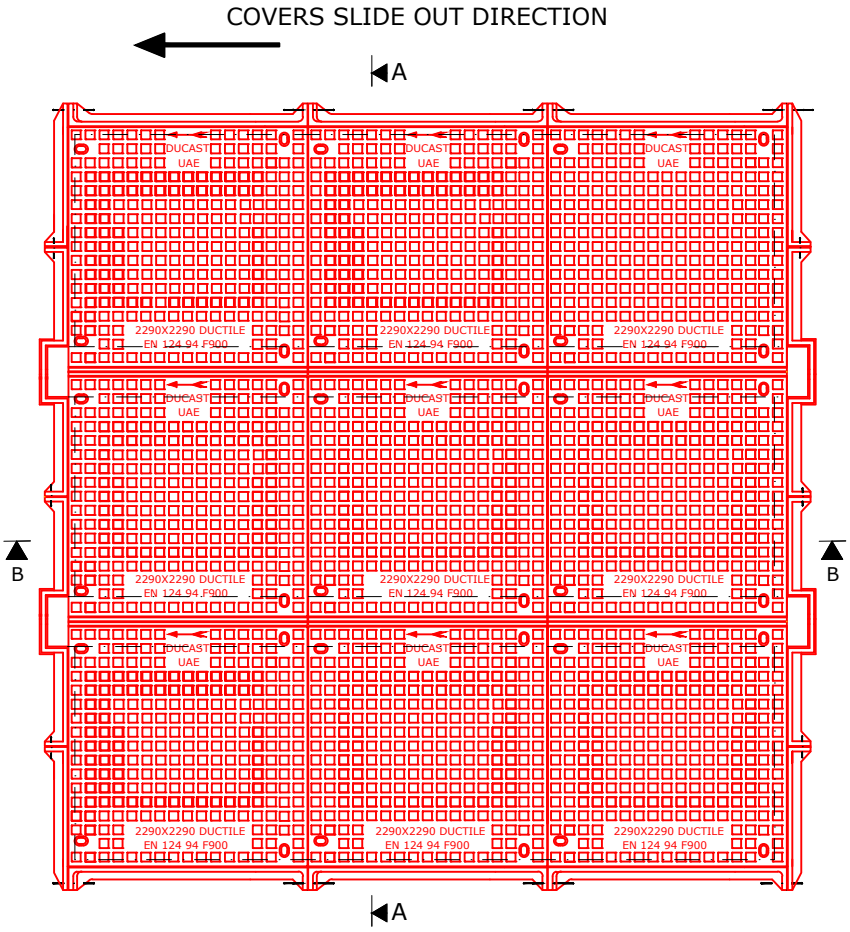

Plan View of Cover & Frame

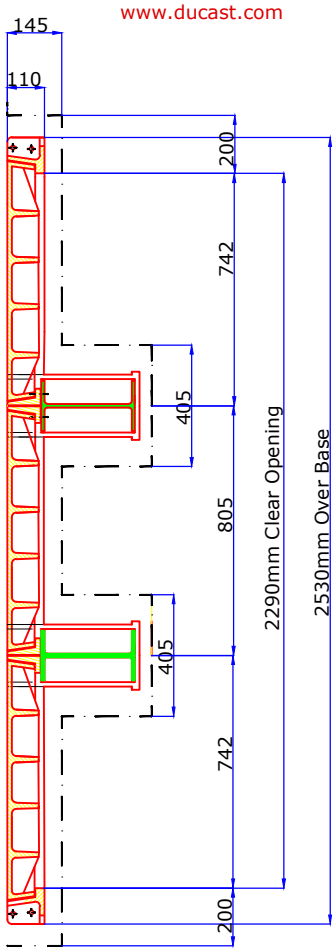

Section A-A

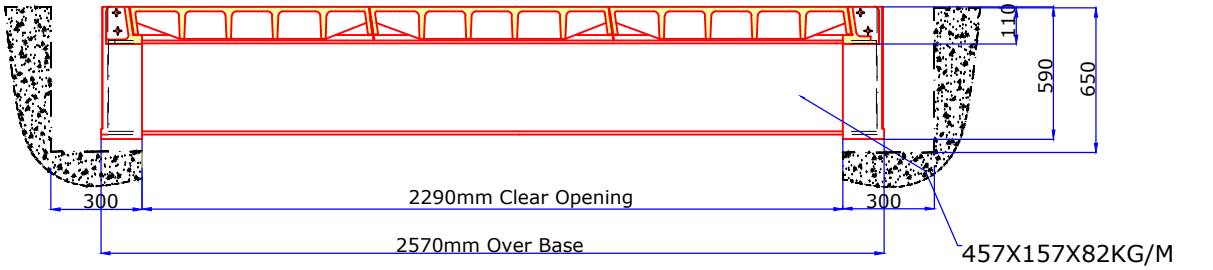

Section B-B

DATE : 25-01-2018	DESCRIPTION :	REV : 0
DRAWN BY : GK	2290x2290MM CLEAR OPENING DUCTILE IRON LOADING CLASS F 900 SOLID TOP MULTIPLE	SCALE : NTS
CHECKED BY: KM	SLIDE OUT COVERS (9-NOS) WITH	ALL DIMENSIONS ARE
APP.BY: AB	REMOVABLE " I " BEAM-2 Nos.	IN MM